# ANT-418-PW-LP DATA SHEET

## Product Dimensions

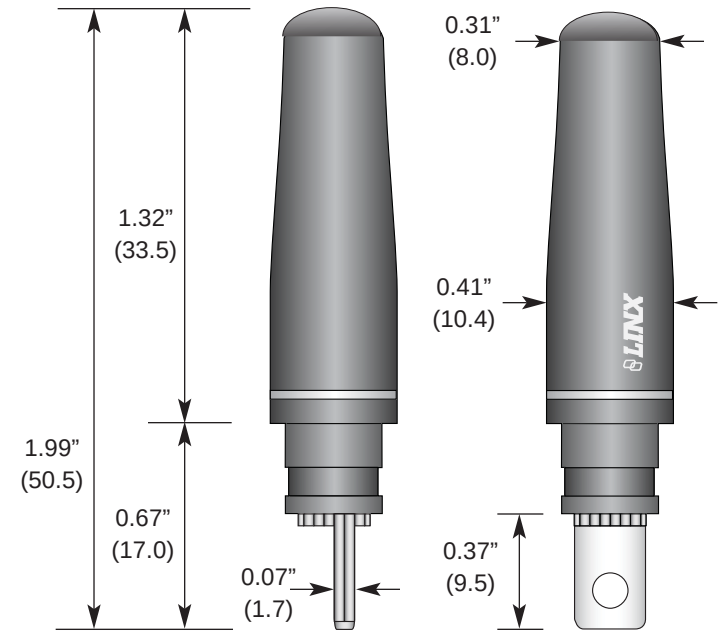


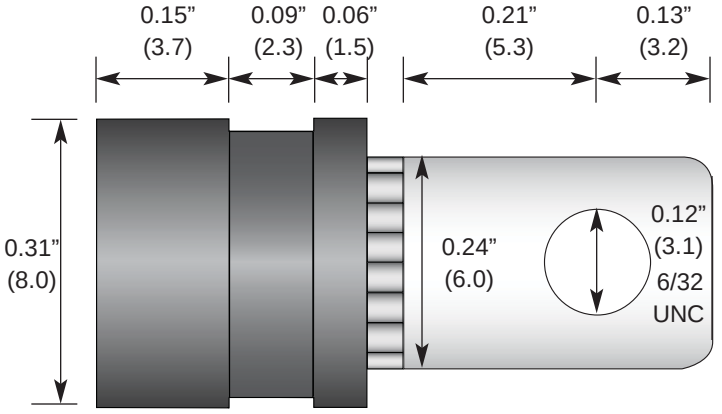


## Description

LP Series antennas utilize a helical element, which greatly reduces the antenna’s size while allowing favorable performance characteristics. These compact antennas are cosmetically attractive and inexpensive, making them ideal for volume applications. The LP Series mounts directly with a single screw, eliminating the expense of a connector while meeting FCC Part 15 requirements.

## Features

- Very low cost
- Compact housing
- Excellent performance
- Omni-directional pattern
- Weather-resistant
- Screw-mount
- Use with plastic* or metal enclosures

  * Requires proximity ground plane

## Electrical Specifications

- Center Freq. 418MHz
- Bandwidth 14MHz
- Wavelength 1/4-wave
- VSWR <1.9 typ. at center
- Impedance 50 ohms
- Connection Screw-mount

Electrical specifications and plots measured on 1.5” x 3.3” reference ground plane

## Ordering Information

- ANT-418-PW-LP

## Recommended Footprint

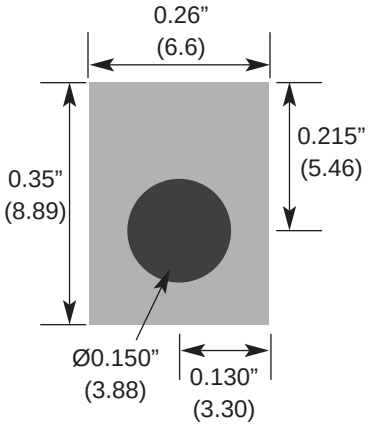


## VSWR Graph

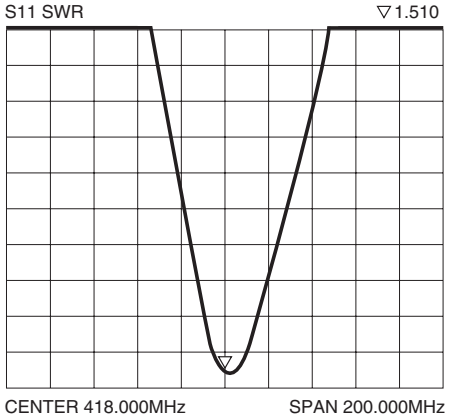


Typical VSWR

**Antenna Factor** 159 Ort Lane Merlin, OR 97532 **www.antennafactor.com**
541-956-0931 (phone) 541-471-6251 (fax)